1. FREEZER

Exploded View

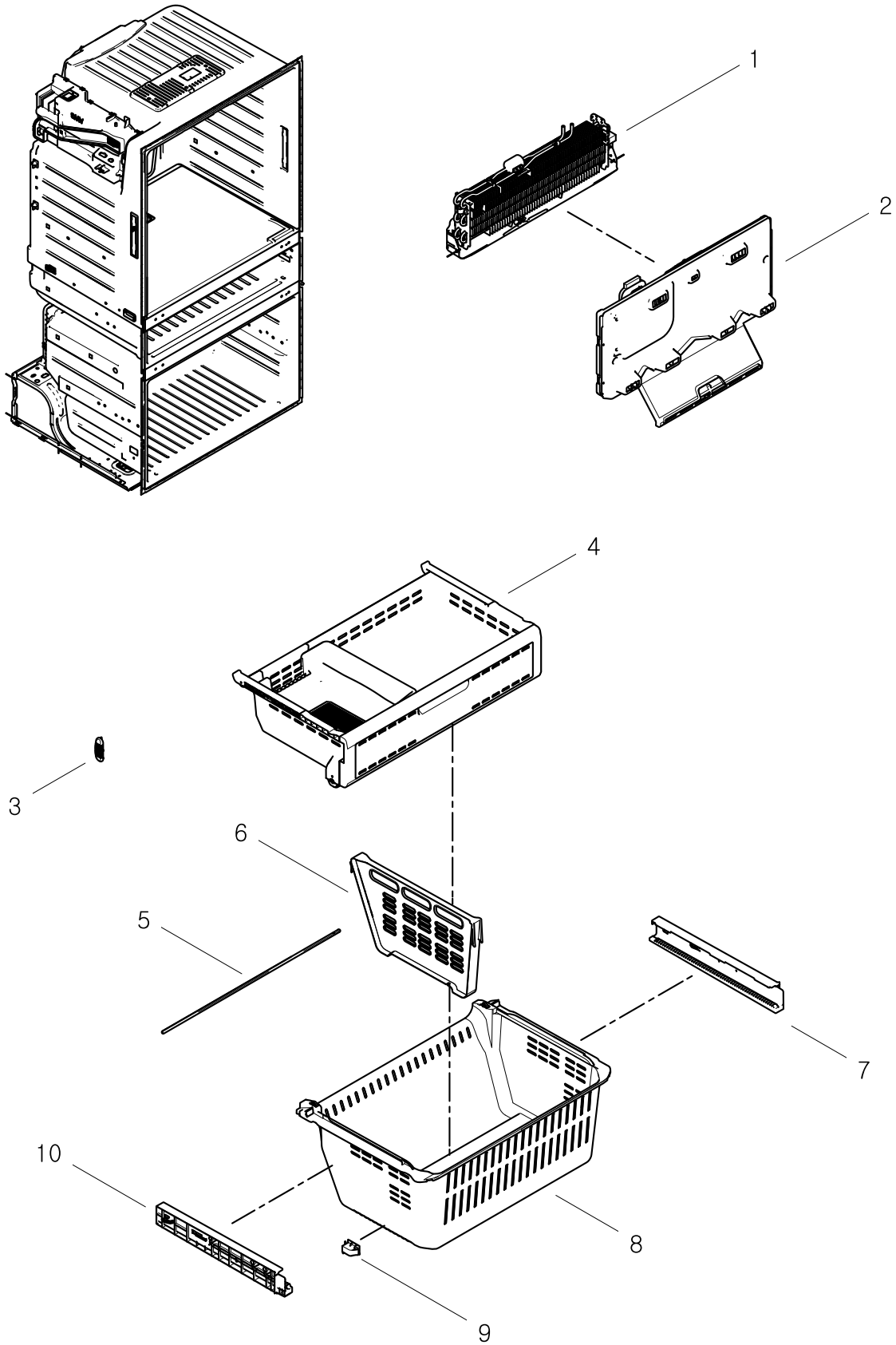

Copyright© 1995-2011 SAMSUNG. All rights reserved.

Parts List

No.	Parent	Lvl.	Loc.	Material Code	Description & Specification	SNA	Qty.
1	DA90-06834A	2	RF011	DA96-00843A	ASSY EVAP FRE; OPUS1-PJT,FIN,120V/230W	SA	1
2	DA90-06832A	2	RF005	DA97-11321A	ASSY COVER EVAP-FRE; AW33-'11,ICE MAKER	SA	1
3	DA97-11437A	4		DA97-08608A	ASSY COVER-SENSOR FRE; AW3	SNA	1
4	DA90-06834A	2	RI242	DA97-11319A	ASSY TRAY-FRE UPP; OPUS1,ASSY	SA	1
5	DA90-06834A	2	RI244	DA66-00834A	SHAFT-GEAR; OPUS1,SM25C,613.1,BLACK Elect	SA	1
6	DA90-06834A	2	RI218	DA61-07219A	GUIDE-DRAWER BOX; OPUS1-PJT,PP,COOL WHITE	SA	1
7	DA90-06834A	2	RI224	DA63-03415A	COVER-RAIL LOW R; AW-PJT,ABS,-,-,-,-,-,CO	SA	1
8	DA90-06834A	2	RI227	DA97-11320A	ASSY TRAY-DRAWER BOX; OPUS1,ASSY	SA	1
9	DA90-06834A	2	RF041	DA34-10120E	SWITCH DOOR-F; -,slide,-,-,250V,-,0.5A,-,	SA	1
10	DA90-06834A	2	RI223	DA63-03414A	COVER-RAIL LOW L; AW-PJT,ABS,-,-,-,-,-,CO	SA	1

Copyright© 1995-2011 SAMSUNG. All rights reserved.

2. REFRIGERATOR

Exploded View

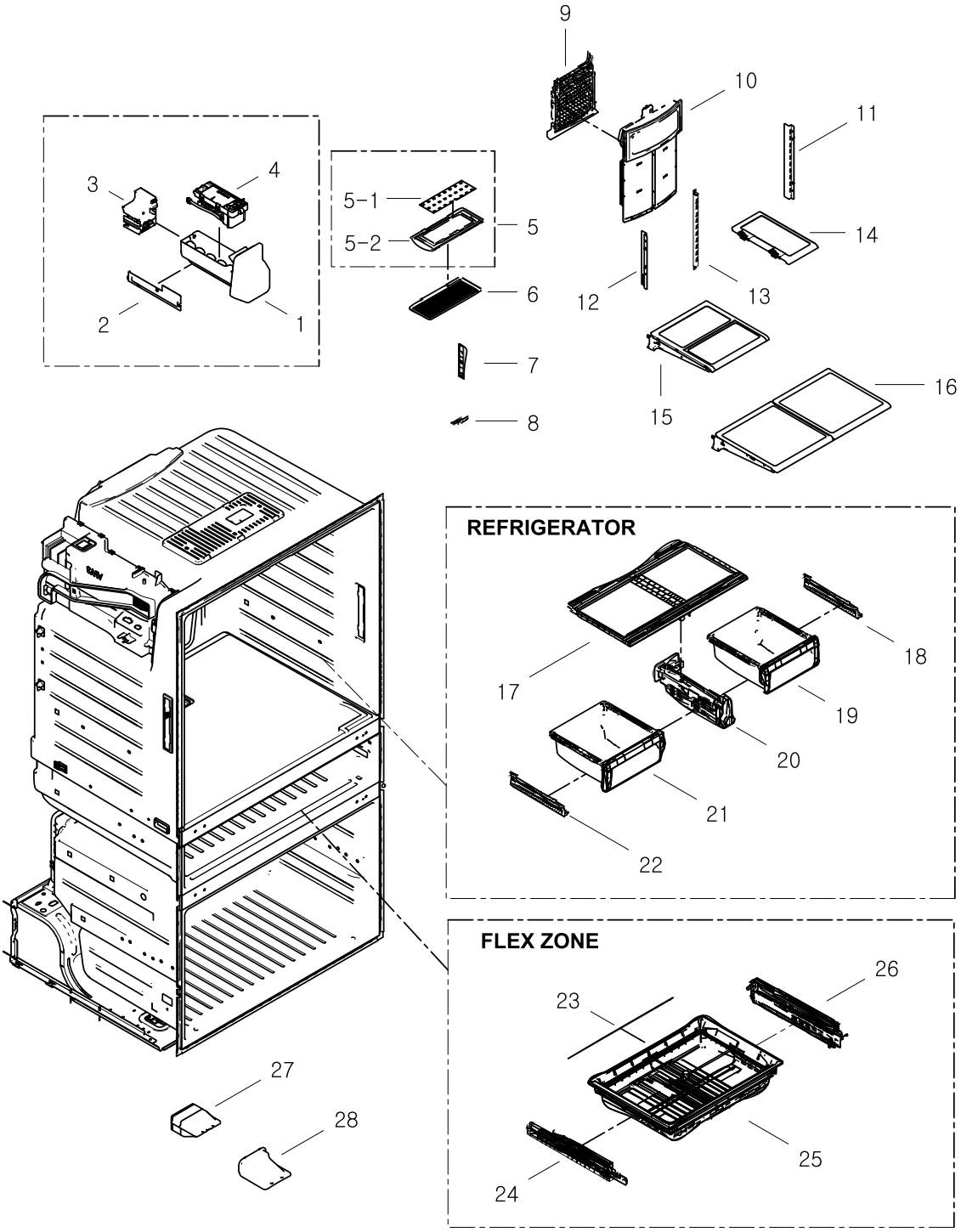

Copyright© 1995-2011 SAMSUNG. All rights reserved.

Parts List

No.	Parent	Lvl.	Loc.	Material Code	Description & Specification	SNA	Qty.
1	DA90-06837A	2	RF304	DA97-11117A	ASSY TRAY-ICE BUCKET; AW-PJT,90,490,WHT,B	SA	1
2	DA90-06837A	2	RM038	DA63-03691A	COVER-HARNESS ICE ROOM; AW-PJT,HIPS,COOL-	SA	1
3	DA90-06837A	2	RF416	DA97-05246G	ASSY CASE-AUGER MOTOR; AW2,115V/60Hz	SA	1
4	RF4267HARS/XAA	1	RM061	DA90-06837A	ASSY ICE MAKER; RF4267,26cu,4DOOR	SNA	1
5	DA90-06834A	2		DA97-11301A	ASSY CASE-LAMP REF; OPUS1,LED 10EA	SNA	1
5-1	DA97-11301A	3	RR947	DA96-00398F	ASSY-LAMP LED; NW2 FDR,3chip 10EA	SA	1
5-2	DA97-11301A	3	RI310	DA61-07213A	CASE-LAMP REF; AW33,HIPS,COOL WHITE	SA	1
6	DA90-06834A	2	RG028	DA63-06254A	COVER-LAMP REF; AW33,GPPS,NTR,HF-2660S	SA	1
7	DA90-06834A	2	RU022	DA63-05431A	COVER-LED SIDE; AW3,SAN,NTR	SA	2
8	DA90-06834A	2	RI211	DA61-04285A	GUIDE-FRENCH; AW2-PJT,PC-ABS,-,-,-,COOL-W	SA	1
9	DA90-06834A	2	RI016	DA96-00842A	ASSY EVAP REF; OPUS1,PIN,120V/120W	SA	1
10	DA90-06832A	2	RI008	DA97-11704A	ASSY COVER EVAP-REF; OPUS1	SA	1
11	DA90-06831A	2	RI301	DA61-05897A	ANGLE-SHELF REF SIDE R; AW3,CR,T2.5,COOL	SA	1
12	DA90-06831A	2	RI300	DA61-05898A	ANGLE-SHELF REF SIDE L; AW3,CR,T2.5,COOL	SA	1
13	DA90-06831A	2	RI288	DA97-08459A	ASSY ANGLE-SHELF REF MID; AW3	SA	1
14	DA90-06831A	2	RI287	DA97-11543A	ASSY SHELF-INSERT REF FOLD; OPUS1(4DOOR)	SA	1
15	DA90-06831A	2	RI286	DA97-11455A	ASSY SHELF-QUICK SPACE; OPUS1	SA	1
16	DA90-06831A	2	RU483	DA97-11454A	ASSY SHELF-SLIDE REF; OPUS1	SA	2
17	DA90-06834A	2	RI449	DA97-11287A	ASSY COVER-VEG REF; OPUS1,COOL WHITE,ASSY	SA	1
18	DA94-00641A	3		DA97-11291A	ASSY RAIL VEG-R; OPUS1,COOL WHITE(SC-0274	SNA	1
19	DA90-06834A	2	RI290	DA97-11322A	ASSY CASE-VEG R; OPUS1,ASSY	SA	1
20	DA90-06837A	2		DA97-11340A	ASSY CASE-WATER FILTER TANK; AW33,WHITE	SA	1
21	DA90-06834A	2	RI291	DA97-11323A	ASSY CASE-VEG L; OPUS1,ASSY	SA	1
22	DA94-00641A	3		DA97-11292A	ASSY RAIL VEG-L; OPUS1,COOL WHITE(SC-0274	SNA	1
23	DA90-06834A	2	RU035	DA66-00835A	SHAFT-GEAR CONV; OPUS1,SM25C,665,BLACK	SA	1
24	DA90-06834A	2	RU004	DA97-08808A	ASSY RAIL-SLIDE CONV L; AW3,STS430,INTERN	SA	1

Copyright© 1995-2011 SAMSUNG. All rights reserved.

No.	Parent	Lvl.	Loc.	Material Code	Description & Specification	SNA	Qty.
25	DA90-06834A	2		DA97-11324A	ASSY CASE-CONV; OPUS1,ASSY	SA	1
26	DA90-06834A	2	RU005	DA97-08809A	ASSY RAIL-SLIDE CONV R; AW3,STS430,INTERN	SA	1
27	DA90-06832A	2	RU003	DA97-08430A	ASSY INS-DAMPER CONV; AW3	SA	1
28	DA90-06832A	2	RU016	DA63-05477A	COVER MOTOR-DAMPER; AW3,HIPS,COOL WHITE(S	SA	1

Copyright© 1995-2011 SAMSUNG. All rights reserved.

3. CABINET

Exploded View

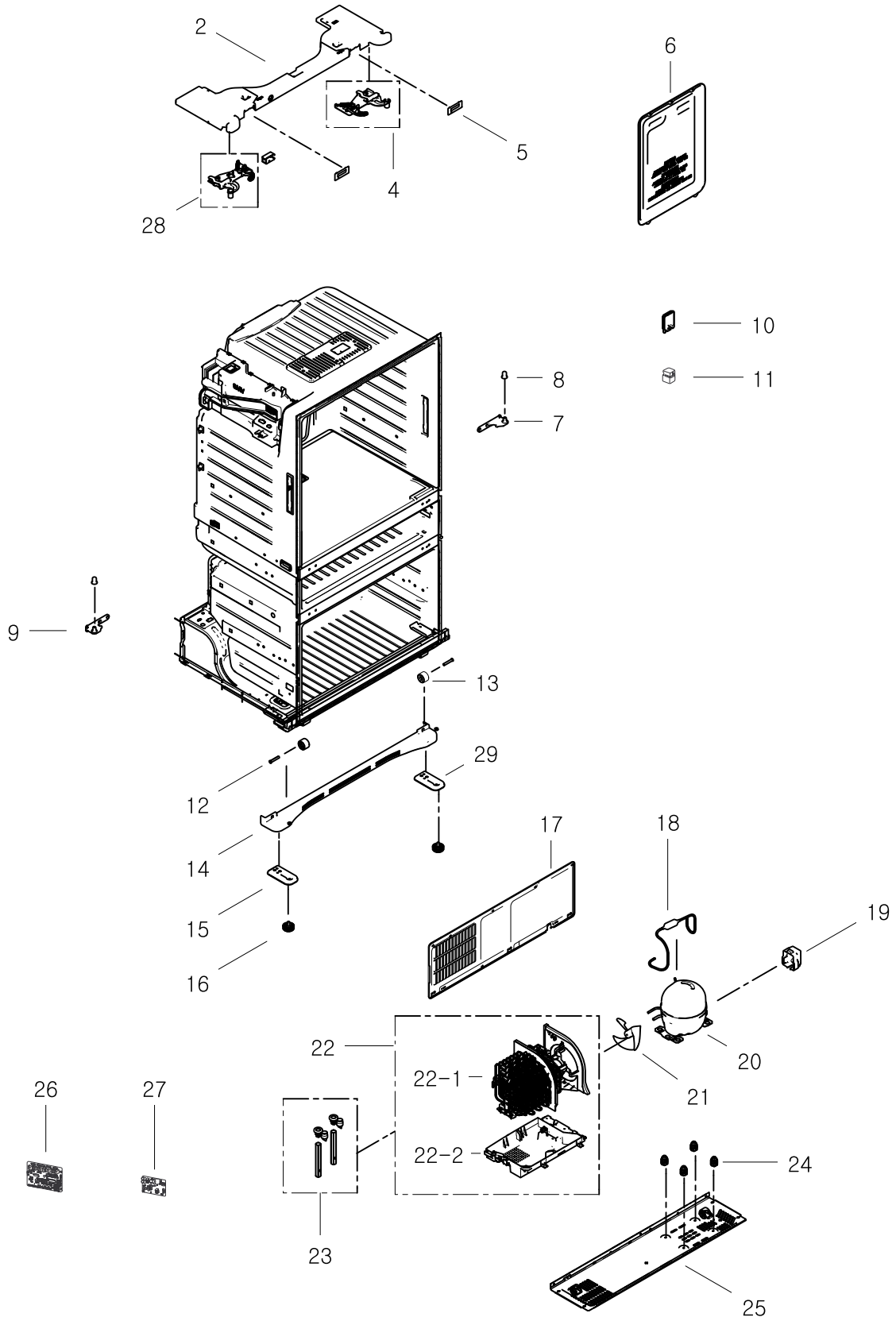

Copyright© 1995-2011 SAMSUNG. All rights reserved.

Parts List

No.	Parent	Lvl.	Loc.	Material Code	Description & Specification	SNA	Qty.
2	DA90-06830A	2	RO133	DA97-11456A	ASSY TOP TABLE; OPUS-1,CREMY-STS	SA	1
4	DA90-06830A	2	RO042	DA97-11471B	ASSY HINGE UPP-R; OPUS-1,T2.9,CREAMY-STS	SA	1
5	DA90-06830A	2	RO184	DA67-02304A	CAP-TOP TABLE; AW2 CD,ABS,-,-,-,CREAMY ST	SA	2
6	DA90-06827A	2	RD067	DA97-08442A	ASSY COVER PCB PANEL; AW3	SA	1
7	DA90-06830A	2	RY757	DA97-11370A	ASSY HINGE MID-R; AW3,ZnDC	SA	1
8	DA90-06830A	2	RY756	DA63-06410A	GROMMET HINGE-MID; AW3,POM,T2.0,W22.6,L23	SA	2
9	DA90-06830A	2	RO536	DA61-07234A	HINGE-MID L; AW,ZN,T4.5,W127,L50,ZnDC 2	SA	1
10	DA90-06837A	2	RM074	DA97-08413A	ASSY COVER-TUBE FILTER; AW3	SA	1
11	DA97-08310H	3	RO354	DA34-00004D	RELAY PROTECTOR O/L; 4TM445PHBYY-82,BK190	SA	1
12	DA97-11395A	3	RH012	DA61-01920A	CASTER-RIVET; (ZPC2),MSWR10,OD8.0,L54,-,-	SA	2
13	DA97-11395A	3	RO360	DA61-04702A	CASTER-FRONT; AW-PJT,PP,-,35,NTR,35,PP+TP	SA	2
14	DA90-06826A	2		DA97-11395A	ASSY CABI BOTT FR; OPUS ONE-PJT,THAI-SILV	SNA	1
15	DA97-11395A	3		DA63-06389A	COVER-LEG FRONT L; OPUS-1,PP,T2.2,CREAMY	SA	1
16	DA97-11395A	3	RO100	DA61-00805C	FOOT-FRONT; AW-PJT,PP,-,-,-,-,-	SA	2
17	DA90-06827A	2	RH001	DA97-11311A	ASSY COVER-COMP; OPUS1	SA	1
18	DA90-06827A	2	RO079	DA97-08458A	ASSY PIPE CONNECT; AW3,4 DOOR	SA	1
19	DA90-06827A	2	RH015	DA63-01866A	COVER RELAY; NORYL,T2.0,SSEC,BLACK,HOOK	SA	1
20	DA90-06827A	2	RH002	MKV190CL2B/E01	COMPRESSOR; 115V~60HZ,BLDC,FAN,MKV	SA	1
21	DA90-06827A	2	RR028	DA31-00010D	FAN-ASS'Y; -,ET,ZIPEL,ASSY,-,UNIT, 150	SA	1
22	DA90-06827A	2	RH003	DA97-11316A	ASSY TRAY-DRAIN WATER; OPUS1	SA	1
22-1	DA97-11316A	3	RW002	DA97-11491A	ASSY PIPE SPIRAL COND; OPUS1	SA	1
22-2	DA97-11316A	3	RO361	DA63-06379A	TRAY-DRAIN WATER; OPUS1,PP,NTR	SA	1
23	DA90-06827A	2	RZ110	DA97-04049J	ASSY CAP-DRAIN; ASSY,L199.5	SA	2
24	DA90-06827A	2	RH732	DA63-02617A	GROMMET COMP; USP05,EPDM,OD18.5,BLACK	SA	4
25	DA90-06827A	2	RO002	DA97-11314A	ASSY CHASSIS-COMP; OPUS1	SA	1
26	RF4267HARS/XAA	1	RY475	DA92-00146A	ASSY PCB MAIN; 115Vac, 12Vdc, 5Vdc, GND,L	SA	1
27	RF4267HARS/XAA	1	RO326	DA41-00614B	ASSY PCB SUB INVERTER; AW3-PJT,TOP,FR-4,1	SA	1

Copyright© 1995-2011 SAMSUNG. All rights reserved.

No.	Parent	Lvl.	Loc.	Material Code	Description & Specification	SNA	Qty.
28	DA90-06830A	2	RO041	DA97-11470B	ASSY HINGE UPP-L; OPUS-1,T2.9,CREAMY-STS	SA	1
29	DA97-11395A	3		DA63-06405A	COVER-LEG FRONT R; OPUS-1,PP,T2.2,CREAMY	SA	1

Copyright© 1995-2011 SAMSUNG. All rights reserved.

4. FREEZER-DOOR

Exploded View

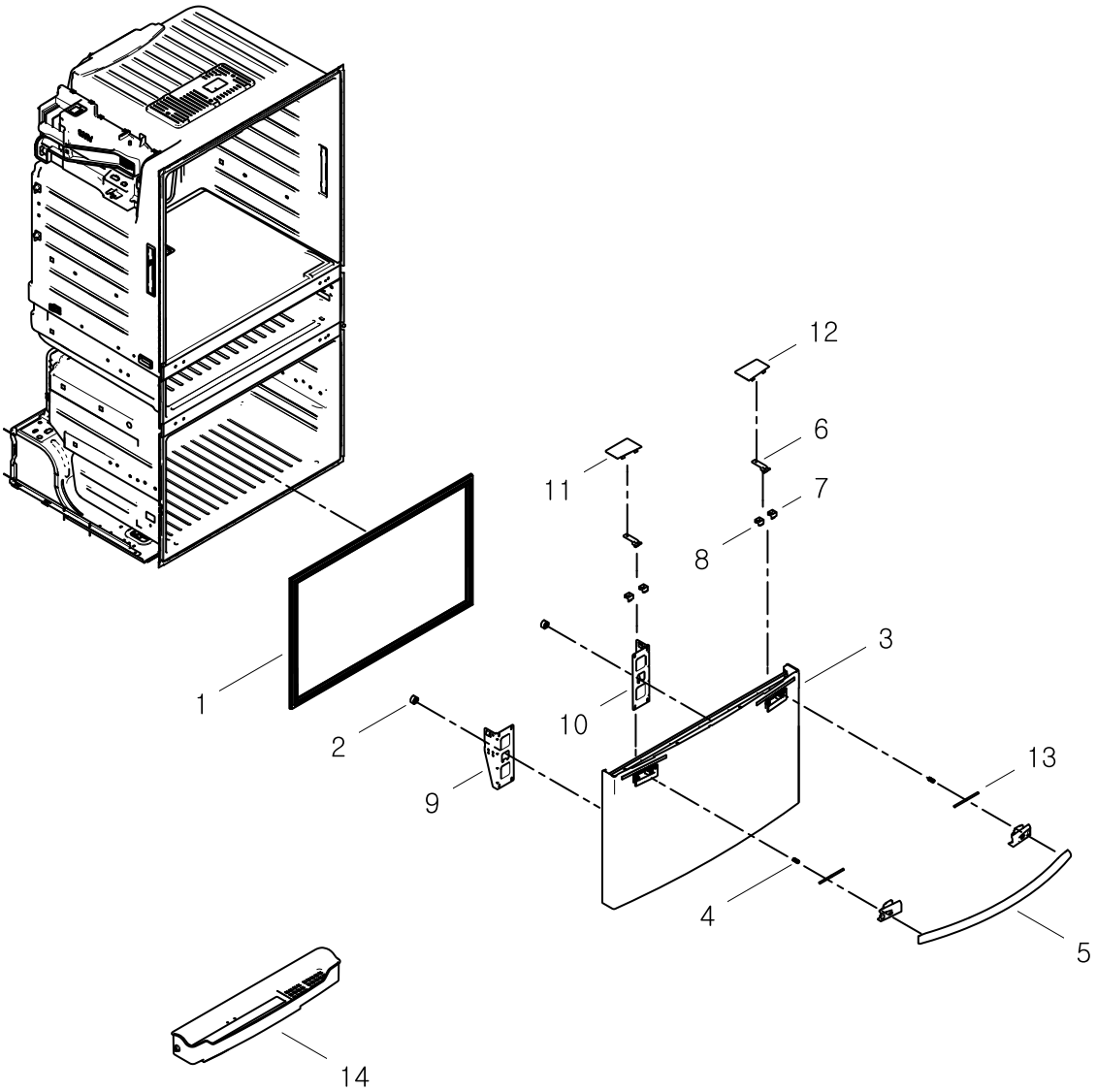

Parts List

No.	Parent	Lvl.	Loc.	Material Code	Description & Specification	SNA	Qty.
1	DA91-03625A	3	RU513	DA97-05557T	ASSY-GASKET DOOR FRE; OPUS1,GRAY	SA	1
2	DA91-03625A	3	RD086	DA61-02904A	SUPPORT-DOOR POSITION,IN; NEXT,HIPS,-,-,-	SA	2
3	DA91-03625A	3	RD001	DA91-03613A	ASSY DOOR FOAM FRE; OPUS1,REAL STS	SA	1
4	DA91-03622A	3	RD157	DA61-04335A	SPRING ETC-EASY HANDLE; 08 AW1,2-PJT,HSWR	SA	2
5	DA97-11490C	4	RO392	DA64-03919C	HANDLE BAR-FRE; AW33_FDR,AL,Versailles ST	SNA	2

Copyright© 1995-2011 SAMSUNG. All rights reserved.

No.	Parent	Lvl.	Loc.	Material Code	Description & Specification	SNA	Qty.
6	DA91-03622A	3	RU036	DA61-06014A	SLIDER-EASY HANDLE; AW3,POM,CREAMY-STS	SA	2
7	DA91-03625A	3	RU029	DA61-05899A	FIXER-SHAFT R; AW3,POM,NTR	SA	2
8	DA91-03622A	3	RU028	DA61-05930A	FIXER-SHAFT L; AW3,POM,BLACK(SC-00477R)	SA	2
9	DA91-03625A	3	RD092	DA61-03153A	HANGER-RAIL FRONT L; AW,SECC1,T2.0,COOL W	SA	1
10	DA91-03625A	3	RD093	DA61-03155A	HANGER-RAIL FRONT R; AW-PJT,SECC1,T2.0,CO	SA	1
11	DA91-03622A	3	RU020	DA63-05432A	COVER-HANDLE L; AW3,ABS,CREAMY-STS(SC-020	SA	1
12	DA91-03622A	3	RU021	DA63-05433A	COVER-HANDLE R; AW3,ABS,CREAMY-STS(SC-020	SA	1
13	DA91-03625A	3	RK756	DA66-00579A	SHAFT-CAP HANDLE; AW-PJT,SM45C,105,5,ZPC3	SA	2
14	DA90-06836A	2	RD354	DA63-06276A	GUARD-FRE; OPUS1,HIPS,T2.5,W713.1,L114.7,	SA	1

Copyright© 1995-2011 SAMSUNG. All rights reserved.

5. REFRIGERATOR-DOOR-L

Exploded View

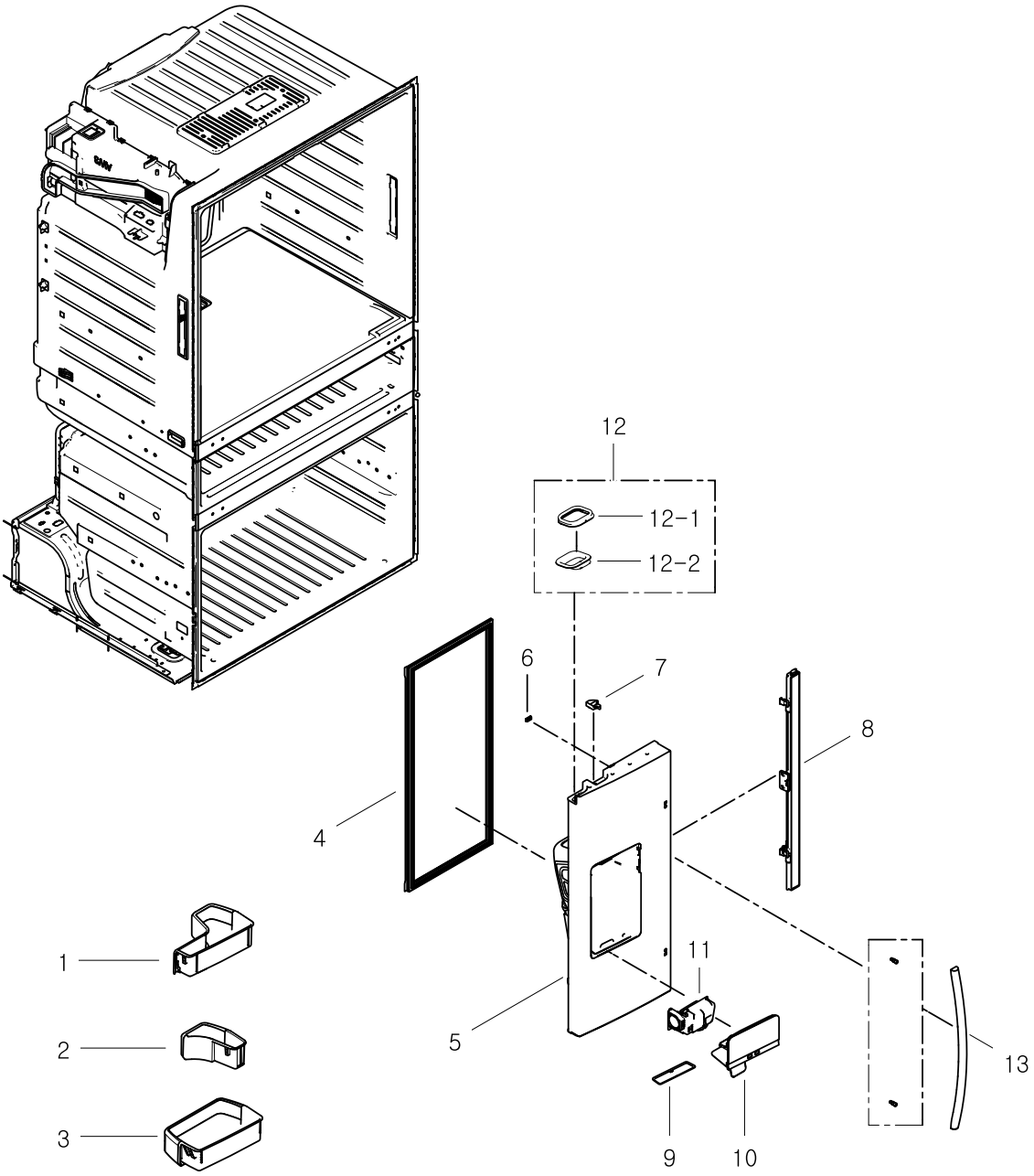

Parts List

No.	Parent	Lvl.	Loc.	Material Code	Description & Specification	SNA	Qty.
1	DA90-06836A	2	RE152	DA97-11523A	ASSY GUARD-DISPENSER; OPUS1	SA	1
2	DA90-06836A	2	RE367	DA97-11522A	ASSY GUARD REF-MID; OPUS1	SA	1
3	DA90-06836A	2	RE153	DA97-11521A	ASSY GUARD REF-L; OPUS1	SA	1
4	DA90-06829A	2	RR238	DA97-05253S	ASSY-GASKET DOOR REF; OPUS1-PJT,GRAY	SA	1
5	DA90-06829A	2	RE100	DA91-03612A	ASSY DOOR FOAM REF-L; OPUS1	SA	1

Copyright© 1995-2011 SAMSUNG. All rights reserved.

No.	Parent	Lvl.	Loc.	Material Code	Description & Specification	SNA	Qty.
6	DA97-11305A	4	RY479	DA61-03769A	MAGNET-A; HERMES,-,5x7x18,-,-,1200Gauss	SA	1
7	DA97-11305A	4	RO175	DA66-00442B	CAM-AUTO CLOSE L; AW-PJT,NY6,-,-,CREAMY S	SA	1
8	DA90-06829A	2	RE131	DA97-08512L	ASSY-FRENCH; OPUS-1,THAI SIVER,120V, 10W	SA	1
9	DA90-06829A	2	RO489	DA63-05506A	TRAY-DISPENSER; AW3,ABS,CREAM-STS(SC-0700	SA	1
10	DA90-06829A	2	RE277	DA97-11332A	ASSY COVER DISP; OPUS1,CREAM STS,STS COVE	SA	1
11	DA90-06829A	2	RE092	DA97-08680A	ASSY CASE-ICE ROUTE; AW3	SA	1
12	DA90-06829A	2	RR159	DA97-05353A	ASSY CAP-CHUTE ICE; AW-PJT(BEST),-,-,-,-,	SA	1
12-1	DA97-05353A	3	RE161	DA63-03698A	GASKET-CAP CHUTE ICE; AW-PJT(BEST),SILICO	SA	1
12-2	DA97-05353A	3	RD266	DA67-01729A	CAP-CHUTE ICE; AW-PJT,ABS(HG-0760H),-,-,-	SA	1
13	DA97-11081C	4	RO384	DA64-03756C	HANDLE BAR-REF; AW3,AL,T1.3,Versailles ST	SNA	2

Copyright© 1995-2011 SAMSUNG. All rights reserved.

6. REFRIGERATOR-DOOR-R

Exploded View

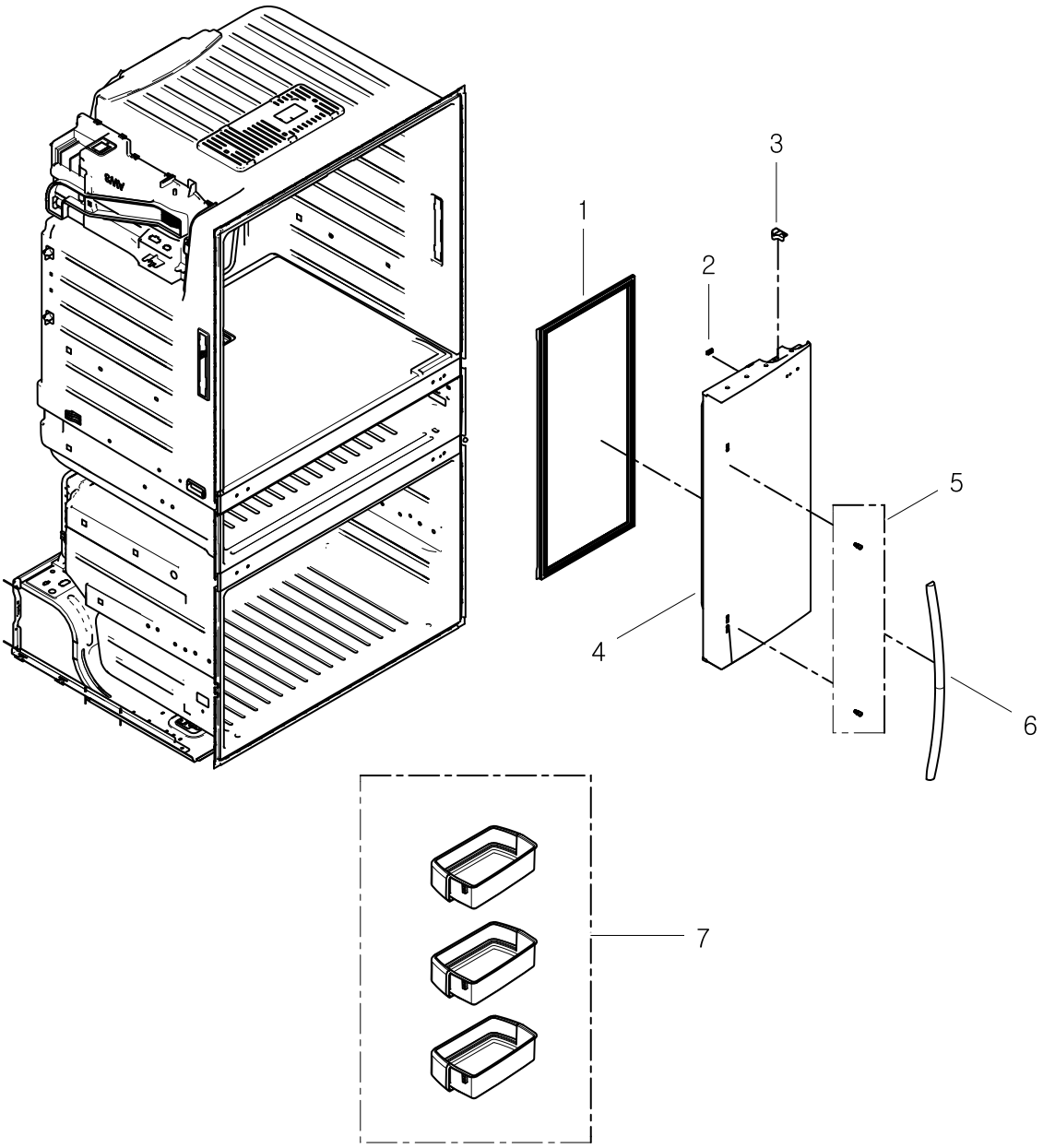

Parts List

No.	Parent	Lvl.	Loc.	Material Code	Description & Specification	SNA	Qty.
1	DA90-06829A	2	RR238	DA97-05253S	ASSY-GASKET DOOR REF; OPUS1-PJT,GRAY	SA	1
2	DA97-11305A	4	RY479	DA61-03769A	MAGNET-A; HERMES,-,5x7x18,-,-,1200Gauss	SA	1
3	DA97-11304A	4	RO573	DA66-00441B	CAM-AUTO CLOSE R; AW-PJT,NY6,-,-,CREAMY S	SA	1
4	DA90-06828A	2	RE101	DA91-03611A	ASSY DOOR FOAM REF-R; OPUS1	SA	1

Copyright© 1995-2011 SAMSUNG. All rights reserved.

No.	Parent	Lvl.	Loc.	Material Code	Description & Specification	SNA	Qty.
5	DA90-06829A	2	RR178	DA61-03734A	FIXER-HANDLE; AW-PJT,SWRCH18A,M8,-,GE	SA	2
6	DA97-11081C	4	RO384	DA64-03756C	HANDLE BAR-REF; AW3,AL,T1.3,Versailles ST	SNA	2
7	DA90-06836A	2	RE154	DA97-11520A	ASSY GUARD REF-R; OPUS1,W316.4,L228.4	SA	3

Copyright© 1995-2011 SAMSUNG. All rights reserved.

7. FLEX ZONE-DOOR

Exploded View

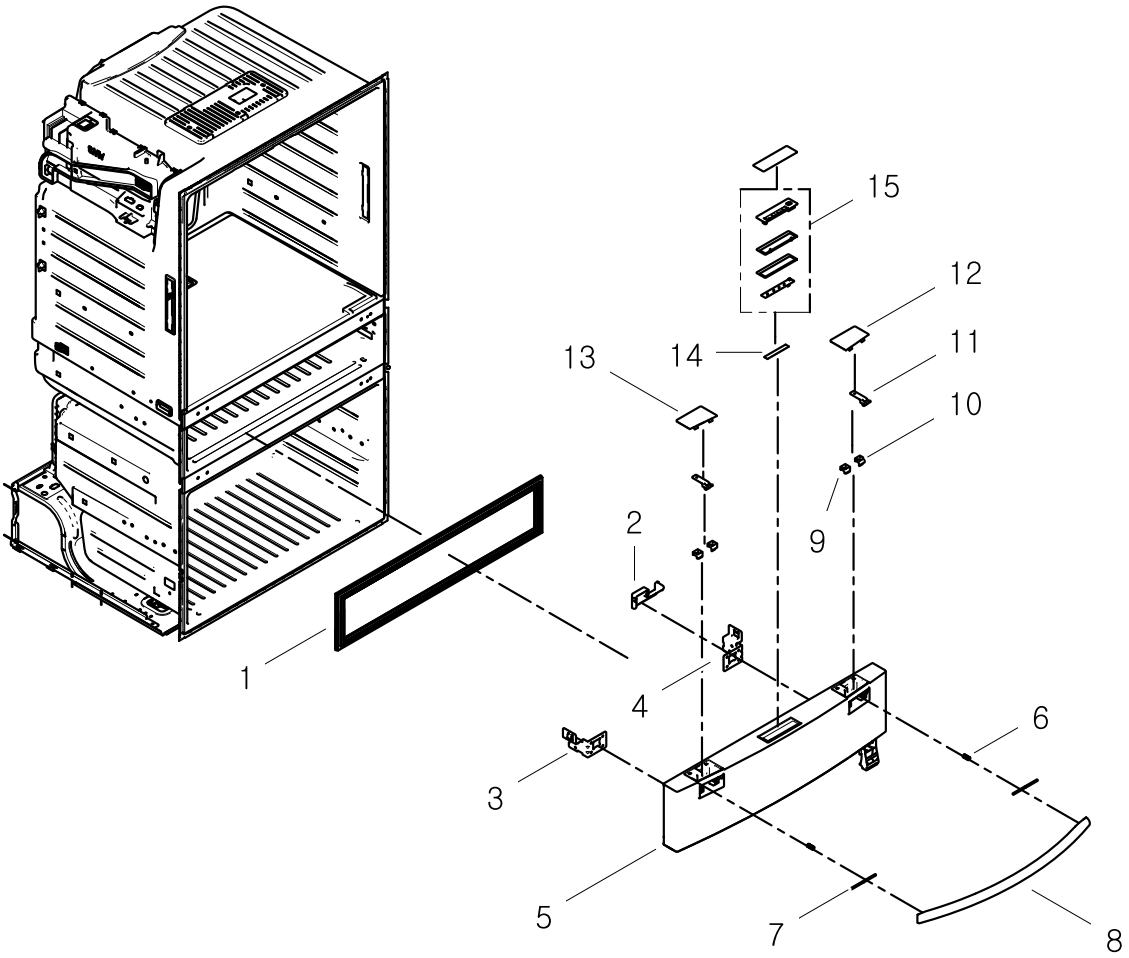

Parts List

No.	Parent	Lvl.	Loc.	Material Code	Description & Specification	SNA	Qty.
1	DA91-03625A	3	RU513	DA97-05557T	ASSY-GASKET DOOR FRE; OPUS1,GRAY	SA	1
2	DA91-03627A	2	RU027	DA63-05462A	COVER-W/HARNESS CONV DOOR; AW3,PP,COOL WH	SA	1
3	DA91-03622A	3	RU031	DA61-05937A	HANGER-RAIL FRONT CONV L; AW3,EGI-SECC,T2	SA	1
4	DA91-03622A	3	RU032	DA61-05938A	HANGER-RAIL FRONT CONV R; AW3,EGI-SECC,T2	SA	1
5	DA91-03622A	3	RU002	DA91-03614A	ASSY DOOR-FOAM CONV; OPUS1,REAL STS	SA	1
6	DA91-03622A	3	RD157	DA61-04335A	SPRING ETC-EASY HANDLE; 08 AW1,2-PJT,HSWR	SA	2
7	DA91-03625A	3	RK756	DA66-00579A	SHAFT-CAP HANDLE; AW-PJT,SM45C,105,5,ZPC3	SA	2

Copyright© 1995-2011 SAMSUNG. All rights reserved.

No.	Parent	Lvl.	Loc.	Material Code	Description & Specification	SNA	Qty.
8	DA97-11490C	4	RO392	DA64-03919C	HANDLE BAR-FRE; AW33_FDR,AL,Versailles ST	SNA	2
9	DA91-03622A	3	RU028	DA61-05930A	FIXER-SHAFT L; AW3,POM,BLACK(SC-00477R)	SA	2
10	DA91-03625A	3	RU029	DA61-05899A	FIXER-SHAFT R; AW3,POM,NTR	SA	2
11	DA91-03622A	3	RU036	DA61-06014A	SLIDER-EASY HANDLE; AW3,POM,CREAMY-STS	SA	2
12	DA91-03622A	3	RU021	DA63-05433A	COVER-HANDLE R; AW3,ABS,CREAMY-STS(SC-020	SA	1
13	DA91-03622A	3	RU020	DA63-05432A	COVER-HANDLE L; AW3,ABS,CREAMY-STS(SC-020	SA	1
14	DA91-03622A	3	RU018	DA63-05630A	COVER-CONTROL WINDOW CONV; AW3,ACRYL,T2.0	SA	1
15	DA91-03622A	3	RU001	DA97-10605B	ASSY COVER CONTROL-DISPLAY CONV; AW3,NTR	SA	1

Copyright© 1995-2011 SAMSUNG. All rights reserved.